A10-10620-21

REVISIONS

NEW RELEASE
PER ECN 16990

REV A: 05-22-2010
REVERSE N.O. & N.C.
CONTACTS OF RL1.
TR2 & TR3 ADDED.
ADD TEST SOLENOID
TO RL1.
ECN E00705, L&T

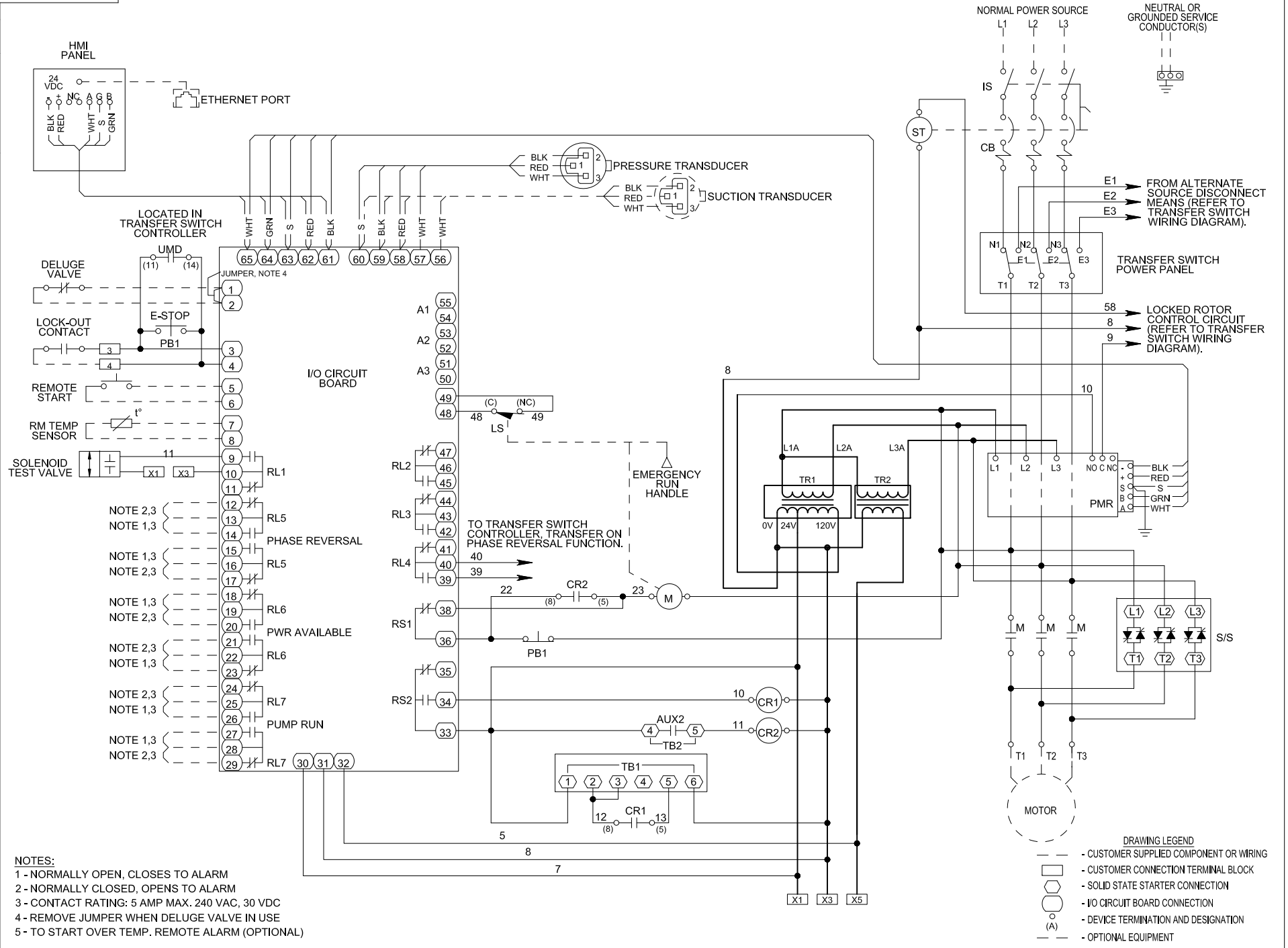

NOTES:
1 - NORMALLY OPEN, CLOSES TO ALARM
2 - NORMALLY CLOSED, OPENS TO ALARM
3 - CONTACT RATING: 5 AMP MAX. 240 VAC, 30 VDC
4 - REMOVE JUMPER WHEN DELUGE VALVE IN USE
5 - TO START OVER TEMP. REMOTE ALARM (OPTIONAL)

DRAWING LEGEND
- CUSTOMER SUPPLIED COMPONENT OR WIRING
- CUSTOMER CONNECTION TERMINAL BLOCK
- SOLID STATE STARTER CONNECTION
- I/O CIRCUIT BOARD CONNECTION
- DEVICE TERMINATION AND DESIGNATION
- OPTIONAL EQUIPMENT

TITLE BUL. 10620 FIRE PUMP CONTROLLERS, SOLID STATE STARTING & STOPPING WITH TRANSFER SWITCH (DUAL UTILITY CONTROL)

MADE BY SDC APP'D DJD DATE 04/28/08

Joslyn Clark
JOSLYN CLARK CONTROLS, LLC
ELIZABETHTOWN, NC 28337 USA

SCALE: 0.6 FILE: 10620-1-E

A10-10620-21

SHEET 1 OF 1

DES. LVL. E REV. A

A 10-10600-21

SUITABLE FOR USE AS SERVICE EQUIPMENT

REVISIONS
NEW RELEASE PER ECN 14382.
REV. A: 1-17-2011 ADD TERM #'S TO AIS-1 AND AIS-2 ECN E00787. DJD

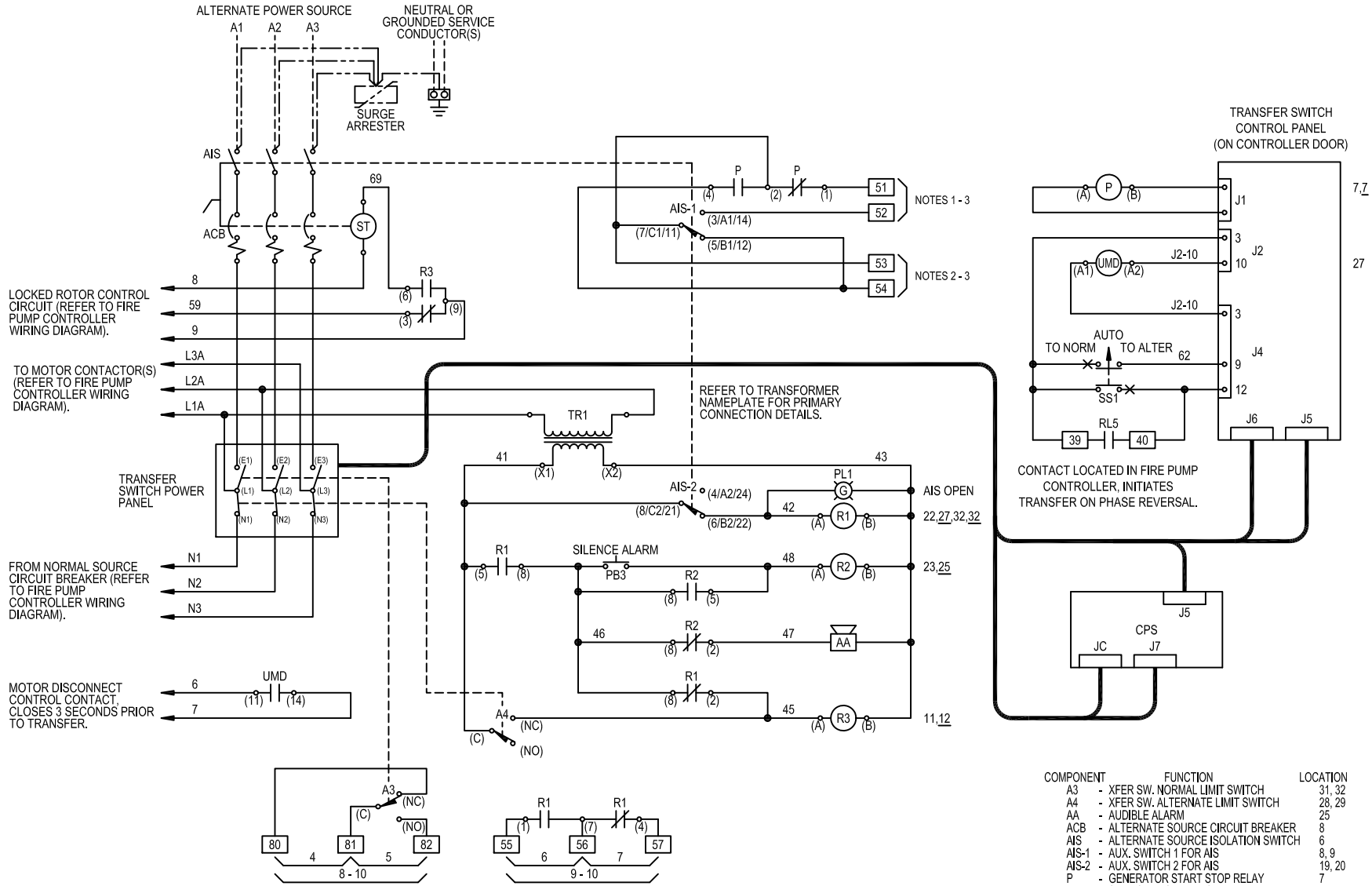

COMPONENT		FUNCTION	LOCATION
A3	-	XFER SW. NORMAL LIMIT SWITCH	31, 32
A4	-	XFER SW. ALTERNATE LIMIT SWITCH	28, 29
AA	-	AUDIBLE ALARM	25
ACB	-	ALTERNATE SOURCE CIRCUIT BREAKER	8
AIS	-	ALTERNATE SOURCE ISOLATION SWITCH	6
AIS-1	-	AUX. SWITCH 1 FOR AIS	8, 9
AIS-2	-	AUX. SWITCH 2 FOR AIS	19, 20
P	-	GENERATOR START STOP RELAY	7
PB1	-	SILENCE PUSH BUTTON	22
R1	-	AIS OPEN ALARM RELAY	20
R2	-	ACKNOWLEDGE ALARM RELAY	22
R3	-	XFER SW. IN ALTERNATE ALARM RELAY	28
SS1	-	MANUAL CONTROL SWITCH	15,16
ST	-	SHUNT TRIP UNIT	8
UMD	-	MOTOR DISCONNECT RELAY	10

NOTES
1 - CLOSES TO START GENERATOR
2 - OPENS TO START GENERATOR
3 - CONTACT RATING: 5 AMP MAX. 30 VDC
4 - CLOSED IN NORMAL POSITION
5 - CLOSED IN ALTERNATE POSITION
6 - NORMALLY OPEN, CLOSES TO ALARM
7 - NORMALLY CLOSED, OPENS TO ALARM
8 - TO TRANSFER SWITCH POSITION REMOTE ALARM
9 - TO ALTERNATE SOURCE ISOLATION SWITCH OPEN REMOTE ALARM
10 - CONTACT RATING: 5 AMP MAX. 250 VAC, 28 VDC

DRAWING LEGEND
- - - - - - CUSTOMER SUPPLIED COMPONENT OR WIRING
CUSTOMER CONNECTION TERMINAL BLOCK
(A) - DEVICE TERMINATION AND DESIGNATION
— — — — OPTIONAL EQUIPMENT

TITLE BUL. 10600 FIRE PUMP CONTROLLER AUTOMATIC TRANSFER SWITCH FOR DUAL UTILTIY CONTROL

MADE BY SDC APP'D DJD DATE 01/17/11

Joslyn Clark

JOSLYN CLARK CONTROLS, LLC
LANCASTER, SC USA 29720-8842

SCALE: 1 FILE: 10600-21 REV A

A 10-10600-21

SHEET 1 OF 1

DES. LVL. G REV. A

A 10-10620-22

REVISIONS
NEW RELEASE PER ECN L00141
REV A: G SERIES PRODUCT LAUNCH PER ECN E00787

SUITABLE FOR USE AS SERVICE EQUIPMENT

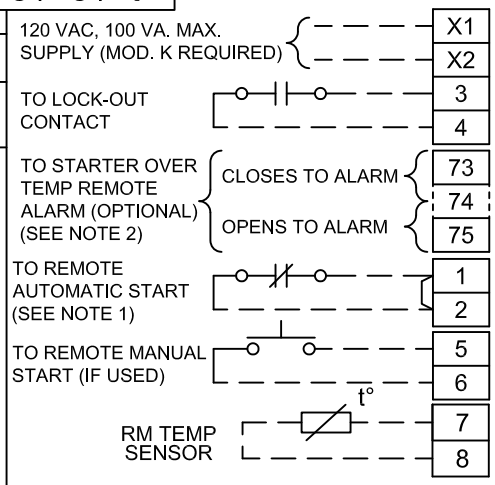

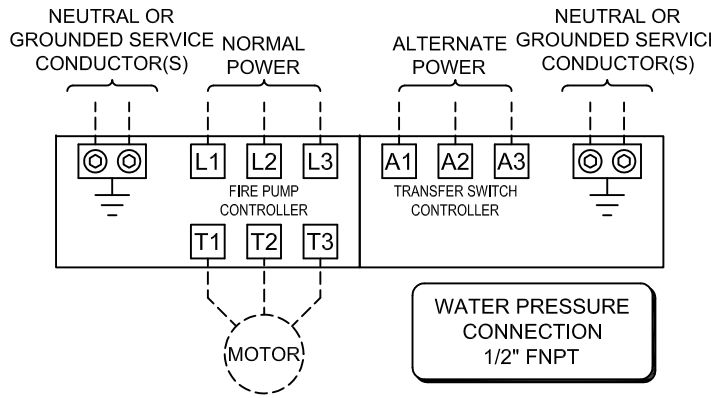

WATER PRESSURE CONNECTION 1/2" FNPT

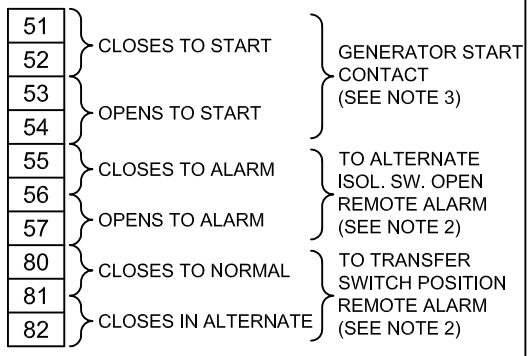

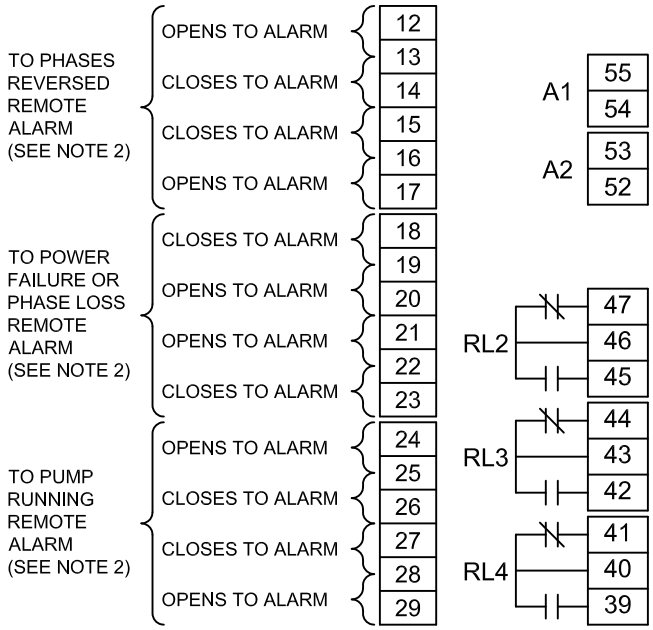

LINE TERMINAL LUG SIZE (PER PHASE)

	HORSEPOWER						WIRE CAPACITY (COPPER WIRE)
	200 V.	230 V.	380 V.	415 V.	460 V.	575 V.	
E SERIES	5 - 25	5 - 30	5 - 50	5 - 60	5 - 60	5 - 75	(1) # 10 AWG - #1/0 AWG
	30	- - -	60	75	75	100	(1) #3 AWG - #3/0 AWG
	40 - 60	40 - 75	75 - 125	100 - 150	100 - 150	125 - 200	(1) #6 AWG - 350 KCMIL
	75 - 150	100 - 200	150 - 350	200 - 350	200 - 400	250 - 500	(2) #3/0 AWG - 500 KCMIL
	200	250	400	400-450	450 - 500	- - -	(3) #3/0 AWG - 500 KCMIL
G SERIES	- - -	- - -	5	5	5	- - -	(1) #14 AWG - #1/0 AWG
	5 - 60	5 - 75	7.5 - 100	7.5 - 100	7.5 - 150	- - -	(1) #14 AWG - #2/0 AWG
	75 - 100	100 - 125	125 - 200	125 - 200	200 - 250	- - -	(2) #2/0 AWG - 500 KCMIL

MOTOR TERMINAL LUG SIZE (PER PHASE)

E SERIES	5 - 15	5 - 20	5 - 30	5 - 30	5 - 40	5 - 50	(1) #10 AWG - #1/0 AWG
	20 - 30	35 - 30	40 - 60	40 - 60	50 - 60	60 - 75	(1) #8 AWG - #2/0 AWG
	40 - 50	40 - 60	75 - 100	75 - 100	75 - 125	100 - 125	(1) #6 AWG - 250 KCMIL
	60 - 100	75 - 125	125 - 200	125 - 200	150 - 250	150 - 300	(1) #4 AWG - 500 KCMIL
	125 - 200	150 - 250	250 - 400	250 - 450	300 - 500	350 - 500	(2) #4 AWG - 500 KCMIL
G SERIES	5 - 30	5 - 30	5 - 50	5 - 50	5 - 60	- - -	(1) #9 AWG - #5 AWG
	40 - 50	40 - 60	60 - 100	60 - 100	75 - 125	- - -	(1) #6 AWG - 300 KCMIL
	60 - 100	75 - 125	125 - 200	125 - 200	150 - 250	- - -	(2) #4 AWG - 500 KCMIL

NEUTRAL OR GROUNDING CONDUCTORS

5 - 25	5 - 30	5 - 50	5 - 60	5 - 60	5 - 75	(2) # 14 AWG - #1/0 AWG
30 - 60	40 - 75	60 - 125	75 - 150	75 - 150	100 - 200	(2) #6 AWG - 250 KCMIL
75 - 100	100 - 125	150 - 200	200 - 250	200 - 250	250 - 350	(2) #2 AWG - 600 KCMIL
125 - 200	150 - 250	250 - 400	300 - 450	300 - 500	400 - 500	(4) #6 AWG - 600 KCMIL

NOTES:

1. REMOVE JUMPER IF A REMOTE AUTOMATIC START DEVICE IS USED. THE CONTACT ON THE DEVICE OPEN TO START THE PUMP.
2. ALARM CONTACT RATING: 5 AMP MAX. 240 VAC, 30 VDC.
3. GENERATOR START CONTACT RATING: 5 AMP MAX, 30 VDC.

CONDUCTOR NOTES

- FOR PROPER WIRE SIZING, REFER TO THE *NATIONAL ELECTRICAL CODE*, NFPA 70 OR OTHER LOCAL CODES.
- CONTROLLER IS PHASE ROTATION SENSITIVE, OBSERVE PHASE ROTATION, L1-L2-L3 MUST BE IN ABC SEQUENCE.
- THE LINE AND MOTOR TERMINALS WILL ACCOMMODATE, AS A MINIMUM, COPPER CABLES CAPABLE OF CARRYING 125% OF THE MOTOR FULL LOAD CURRENT.

TITLE BUL. 10620 FIRE PUMP CONTROLLERS, SOLID STATE STARTING & STOPPING WITH TRANSFER SWITCH (DUAL UTILITY CONTROL)

MADE BY SDC APP'D DJD DATE 06/03/08

Joslyn Clark — JOSLYN CLARK CONTROLS, LLC, ELIZABETHTOWN, NC USA 28337

SCALE: 1 FILE: 106320-22-G

A 10-10620-22

SHEET 1 OF 1

DES. LVL. G REV. A